Experiment 11

11.1.2 Sum of digits using recursion

Algorithm :

Step 1: Start
Step 2: Input an integer `n`
Step 3: Call function `sum(n)`
Step 4: If `n == 0`, return 0
Step 5: Else compute:
    a) `r = n % 10` (last digit)
    b) `q = n // 10` (remaining number)
Step 6: Return `r + sum(q)`
Step 7: Print the result
Step 8: Stop

Flowchart :

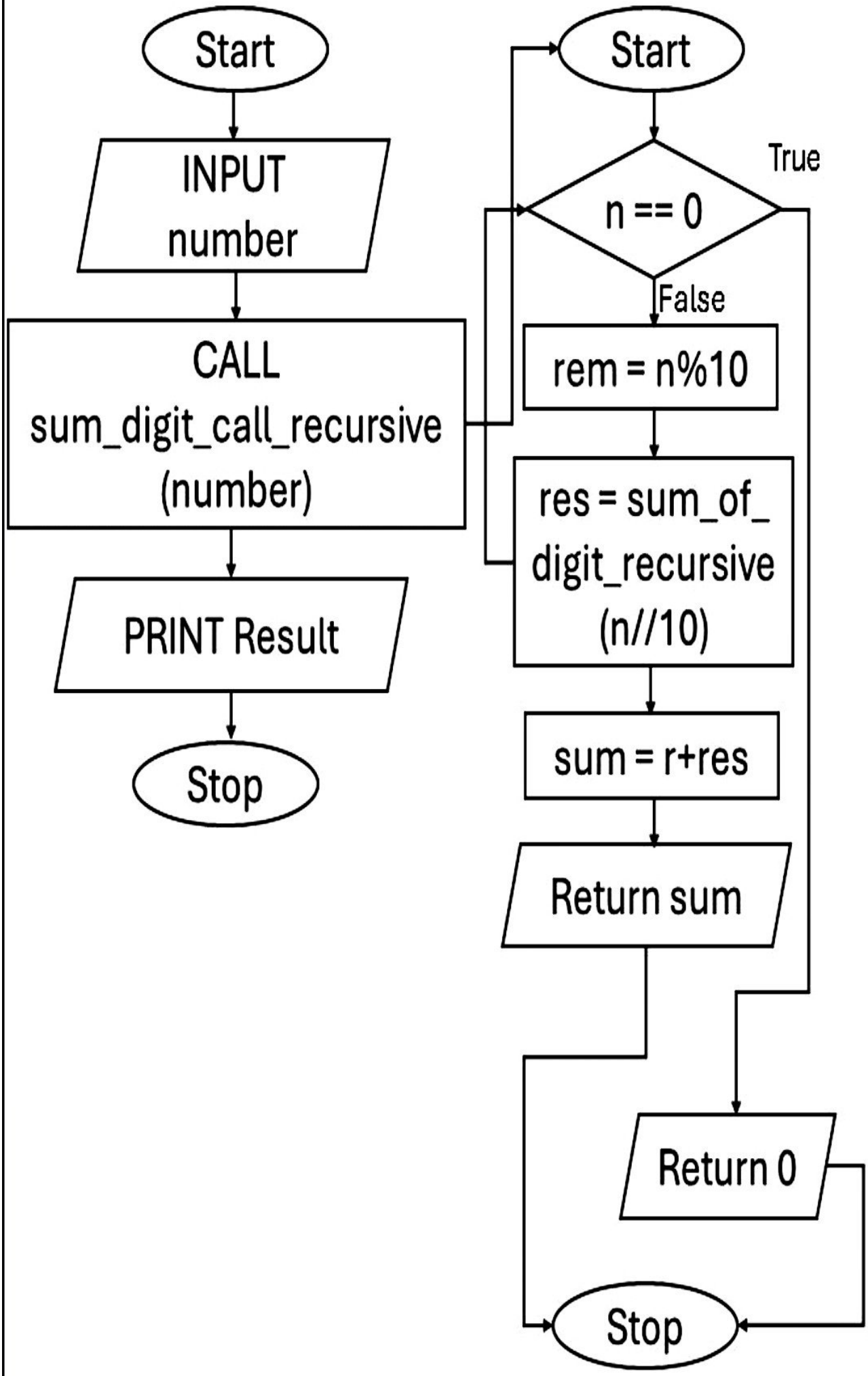
Start
INPUT number
CALL sum_digit_call_recursive (number)
PRINT Result
Stop
Start
n == 0
True
False
rem = n%10
res = sum_of_digit_recursive (n//10)
sum = r+res
Return sum
Return 0
Stop

Code :

```
def sum_of_digits_recursive(n):
    if n==0:
        return 0
    else:

    return(n% 10)+sum_of_digits_recursive(n//10)
number=int(input())
result = sum_of_digits_recursive(number)
print(result)
```

CODETANTRA Home

vedant.awachat.batch2025@sitnagpur.siu.edu.in Support Logout

11.1.2. Sum of Digits using Recursion

17:52

Write a recursive function **sum_of_digits_recursive(n)** that calculates the sum of the digits of a given non-negative integer n.

Input Format:

- The input consists of a single non-negative integer n.

Output Format:

- The output should be the sum of the digits of the non-negative integer n.

Constraints:

- $0 \leq n \leq 10^9$

Sample Test Cases +

Explorer

SumofDi...

SUBMIT

Debugger

```python
def sum_of_digits_recursive(n):
    if n==0:
        return 0
    else:
        return(n%10)+sum_of_digits_recursive(n//10)
number=int(input())

result = sum_of_digits_recursive(number)
print(result)
```

Average time	Maximum time
0.004 s	0.005 s
4.40 ms	5.00 ms

2 out of 2 shown test case(s) passed

3 out of 3 hidden test case(s) passed

Test case 1 6 ms DEBUG

Expected output

23

5

Actual output

23

5

Terminal Test cases

‹ PREV RESET SUBMIT NEXT ›